VASIL'CHENKO, V. N., Aspirant --

"An Investigation of the Addition of Woof in the Weaving of Cloth." Cand Tech Sci, Moscow Textile Inst, 14 Oct 54. (VM, 5 Oct 54)

Survey of Scientific and Technical Dissertations Defended at USSR Higher Educational Institutions (10)

SO: Sum. No. 481, 5 May 55

VASIL'CHENKO, V.N., kandidat tekhnicheskikh nauk.

The required strength limit of warp yarn. Tekst.prom. 15 no.12: 33-36 D '55. (MLRA 9:3)

(Yarn)

VASIL'CHENKO, V.N., kand.tekhn.nauk

Calculating parameters for the beating-up process. Stor. nauch.-issl. rab. TTI no.3:75-82 '56. (MIRA 11:9)
(Looms)

VASIL'CHENKO, V.N., kand.tekhn.nauk

Causes of streak formation in connection with beating-up. Tekst. prom. 18 no.6:25-26 Je '58. (MIRA 11:7)
(Weaving)

VASIL'CHENKO, Vasiliy Nikolayevich; NAUMOV, V.A., retsenzent; AKSENOVA, I.I., red.; KHAKHIN, M.T., tekhn.red.

[Investigating the beating-up process] Issledovanie protsessa priboia utka. Moskva, Gos.nauchno-tekhn.izd-vo lit-ry po legkoi promyshl., 1959. 157 p. (MIRA 12:12)
(Weaving)

AKIMOVA, T.I.; VASIL'CHENKO, V.N.

Selecting efficient parameters for fabric filling. Izv.vys. ucheb.zav.; tekh.tekst.prom. no.6:80-85 '59. (MIRA 13:4)

1. Tashkentskiy tekstil'nyy institut, Tashkentskiy tekstil'nyy kombinat.

(Weaving)

VASIL'CHENKO, V.N.

VASIL'CHENKO, V.N., kand.tekhn.nauk.

Role of the ratchet in the weft beating-up process. Tekst.prom. 17 no.9:29-34 S '57. (MIRA 10:11)

(Looms)

VASIL'CHENKO, V.N., kand.tekhn.nauk.

Effect of loom speed on conditions of beating-up the weft yarn. Tekst.prom. 17 no.12:23-26 D '57. (MIRA 11:1)
(Looms)

VASIL'CHENKO, V.N., kand. tekhn. nauk, dots.

Effect of fabric filling on heddle conditions of weft thread. Izv. vys. ucheb. zav.; tekh. tekst. prom. no.1:122-130 '58. (MIRA 11:5)

1. Tashkentskiy tekstil'nyy institut.
(Weaving)

VASIL'CHENKO, V.N.

Conditions for beating-up depending on yarn numbers. Izv.vys. ucheb.zav.; tekh.tekst.prom. no.2:106-112 '58. (MIRA 11:5)

1. Tashkentskiy tekstil'nyy institut.
(Weaving) (Yarn)

VASIL'CHENKO, Vasiliy Nikolayevich; NAUMOV, V.A., retsenzent; AKSENOVA, I.I., red.; KHAKNIN, M.T., tekhn.red.

[Study of the beating-up process] Issledovanie protsessa priboia utka. Moskva, Gos.nauchno-tekhn.izd-vo lit-ry po legkoi promyshlennosti, 1959. 157 p.

(MIRA 14:1)

(Looms)

ANDRYUSHCHENKO, F.K., kand. tekhn. nauk; VASIL'CHENKO, T.P.

Using electrolyte solutions to eliminate hydrate formation in the production of natural gas in the Shebelinka gas field. Neft. i gaz. prom. no.4:46-50 O-D '63. (MIRA 17:12)

1. Khar'kovskiy politekhnicheskiy institut.

L 1995-66 EWT(1)/EWT(m)/EWP(t)/EWP(b)/EWA(h) IJP(c) JD

ACCESSION NR: AT5013692 UR/2613/64/000/030/0078/0087

AUTHOR: Vasil'chenko, V. P.; Uyoo, L. Ya.

TITLE: The electroluminescent capacitor as an electric circuit element

SOURCE: AN EstSSR. Institut fiziki i astronomii. Trudy, no. 30, 1964. Issledovaniya po lyuminestsentsii (Research on luminescence), 78-87

TOPIC TAGS: luminor, zinc sulfide optic material, electroluminescence, electroluminescent capacitor, electric circuit analysis

ABSTRACT: The purpose of the investigation was to study the electric characteristics of the electroluminescent capacitors and to construct from the resultant data a more accurate equivalent circuit of this capacitor. To this end, the authors considered the dependence of the glow of the electroluminescent capacitor (brightness waves) on the exciting current and on the voltage. The luminor used was ZnS-Cu,Cl,Al, which produces green glow, and the dielectric was epoxy resin ED-5 or the epoxy lacquer EP-096. The electroluminescence was excited with a ZG-2A audio generator in the range from 200 to 5000 cps, at voltages up to 200 V. A schematic diagram of the test circuit and the simplest equivalent circuits of the capacitor are shown in Fig. 1 of the Enclosure. Criteria for the cancellation of the capacitive component of the currents through the capacitor are established. An examina-

Card 1/4

L 1995-66

ACCESSION NR: AT5013692

6

tion of the voltage-ampere characteristic confirms the presence of np junctions in the grains of the electroluminor. It is concluded from the results that a more accurate description of the electric characteristics of the electroluminescent capacitor can be obtained by the equivalent circuit shown in Fig. 2 of the Enclosure. The relative values of the circuit elements are briefly discussed. "The authors thank K.-S. K. Rebane and E. K. Tal'vistE for a discussion of the results and for supplying the capacitor samples." Orig. art. has: 7 figures and 1 formula.

ASSOCIATION: none

SUBMITTED: 01Oct64 ENCL: 02 SUB CODE: OP

NR REF SOV: 005 OTHER: 005

Card 2/4

L 1995-66

ACCESSION NR: AT5013692

ENCLOSURE: 01

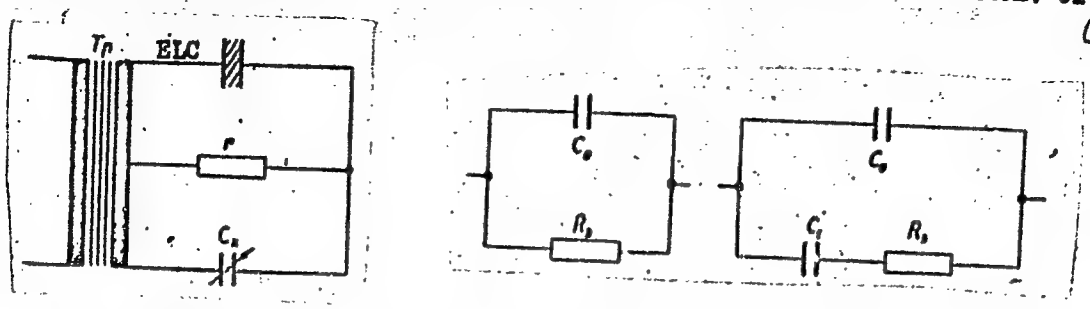

Fig. 1. Diagram of circuit for the compensation of the capacitive current through the electroluminescent capacitor (left) and simplest equivalent circuits of electroluminescent capacitor.

Card 3/4

L 1995-66

ACCESSION NR: AT5013692

ENCLOSURE: 02

0

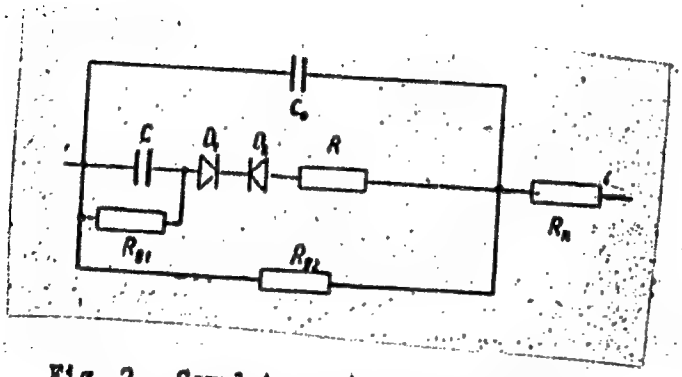

Fig. 2. Complete equivalent circuit of electroluminescent capacitor.

Card 4/4

L 60411-65 EWT(1)/EWT(m)/EWP(t)/EWP(b) Pi-4 IJP(c) JD

ACCESSION NR: AP5010396 UR/0368/65/000/003/0275/0277
535.376

AUTHOR: Vasil'chenko, [illegible]; [illegible]

TITLE: Electroluminescence of ZnS phosphor excited by [illegible]

SOURCE: Ukrainskiy fizicheskiy zhurnal, [illegible]
275-277

TOPIC TAGS: luminor, zinc sulfide optic material, electroluminescence, sounding pulse effect

ABSTRACT: The authors excited electroluminescence in the phosphor by applying a sawtooth voltage [illegible] possible [illegible]

[illegible] application of [illegible] sounding pulses from [illegible] square wave or an [illegible] generator. The [illegible] with a photomultiplier [illegible] The same [illegible]

Card 1/3

results are shown in Fig. 1 of the Enclosure.

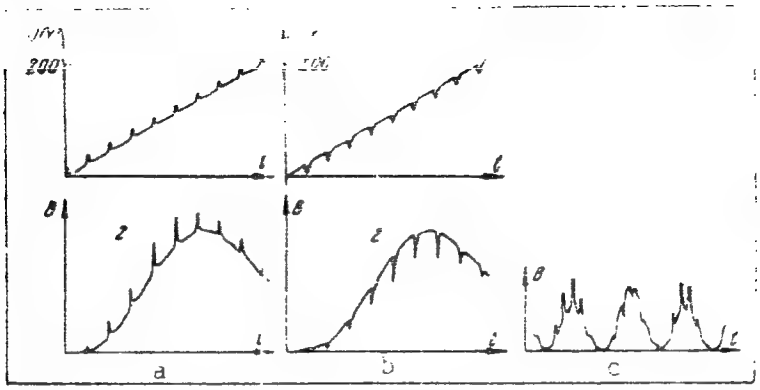

Fig. 1. Effect of short sampling pulses of like (a) and opposite (b) [illegible] sine waveform, [illegible] - [illegible] waveform, and effect [illegible]

Card 3/3

AUTHOR: Vasil'chenko, V. [illegible]

TITLE: On the equivalent [illegible] capacitor

SOURCE: Optika i spektroskopiya [illegible]

TOPIC TAGS: electroluminescence, electroluminescent capacitor, equivalent circuit, np junction

ABSTRACT: [illegible] dealing with the electroluminescent [illegible]

L 34868-65

ACCESSION NR: AP5005056

sible role played by p-n junctions in the [illegible] mechanism. The use [illegible]

plying the capacitor samples. [illegible]

ASSOCIATION: None

SUBMITTED: 03Apr64 ENCL: 01 SUB CODE: OP, EC

NR REF SOV: 005 OTHER: 002

Fig. 1. Volt-ampere characteristics (left) and equivalent circuit (right) of electroluminescent capacitor

Card 3/3

VASIL'CHENKO, V.S.

New design of a water-spraying device mounted in the quenching tower. Koks i khim. no.11:33-34 '60. (MIRA 13:11)

1. Zhdanovskiy koksokhimicheskiy zavod.
(Coke industry--Equipment and supplies)

BERMANT, Ye.Ye.; VASIL'CHENKO, V.S.

Organizing the production control in plants. Metallurg 8 no.11: 34 N '63. (MIRA 16:12)

1. Nachal'nik laboratorii organizatsii proizvodstva i truda zavoda "Zaporozhstal'" (for Bermant). 2. Zamestitel' nachal'nika proizvodstvennogo otdela zavoda "Zaporozhstal'" (for Vasil'chenko).

L 46582-66 EWT(m)

ACC NR: AR6014531 SOURCE CODE: UR/0081/65/000/019/M013/M014

AUTHOR: Vasil'chenko, V. T.; Yusupov, A. N.

TITLE: Effect of structural and mechanical properties on swelling and stability of gasosilicon mixtures

SOURCE: Ref. zh. Khimiya, Abs. 19M135

REF SOURCE: Tr. Alma-Atinsk. n.-i. in-ta stroit. materialov, sb. 6(8), 1964, 202-207

TOPIC TAGS: cement, concrete, plastic strength, porous foam ceramic, surface active agent

ABSTRACT: The main factors determining the stability of gaso silicon mixture in the production of gaso silicon concrete are the excessive pressure of hydrogen in the nuclear cells, plastic strength, surface tension and the height of the mixture layer. The analytical dependence between the excessive hydrogen pressure in the cell, the plastic strength, the surface tension, the radius of the bubble and the pressure of the mixture layer is determined. Author's summary.

SUB CODE: 11/ SUBM DATE: none

Card 1/1 hs

VASIL'CHENKO, V.V.

Shade-type double doors for drying chambers. Der. prom. 11 no.8:26-27 Ag '62. (MIRA 17:2)

1. Rostovskaya-na-Donu bayannaya fabrika.

ANGARSKAYA, M.A.; VASIL'CHENKO, Ye.A.; SOKOLOVA, V. Ye.

Hypoazotemic and diuretic effect of some species of Lespedeza. Rast. res. 1 no.4:544-548 '65 (MIRA 19:1)

1. Khar'kovskiy nauchno-issledovatel'skiy khimiko-farmatsevticheskiy institut. Submitted June 20, 1965.

SOV/110-59-3-13/25

AUTHOR: Vasil'chenko, Yu.A., Engineer

TITLE: The Heat Transfer Coefficient of Radiators Cooled with Transformer Oil (O koeffitsiyente teploperedachi kaloriferov pri okhlazhdenii transformatornogo masla)

PERIODICAL: Vestnik Elektropromyshlennosti, 1959, Nr 3, pp 48-52 (USSR)

ABSTRACT: Now that the losses in a transformer may be as much as 1000 kW there is a great need for compact air-cooled radiators. For cooling transformer oil use might be made of some of the galvanised steel radiators produced for heating systems and although the properties of such equipment when operating with hot water or steam are well known their use for the cooling of transformer oil has not been studied experimentally. This article gives a theoretical analysis of heat transfer from water and transformer oil to the inner tube walls of radiator type KFS and from its ribbed cooling surfaces to the air; heat transfer coefficients are determined for the case of cooling transformer oil. The formula recommended by the All-Union Scientific Research Institute of Sanitary-Technical Equipment for the heat transfer coefficient of

Card 1/4

SOV/110-59-3-13/25

The Heat Transfer Coefficient of Radiators Cooled with Transformer Oil

these radiators is quoted. The tests were made whilst cooling water and the range of validity is given. A somewhat modified formula (2) is then given which can be used to calculate the heat transfer coefficient of the radiator when transformer oil is cooled provided that the heat transfer coefficient from the transformer oil to the tube wall and from the ribbed surface to the air are known. The first of these may be calculated from known equations and the latter determined from results obtained when the radiators are used to cool water. The calculations are then made. It is first shown that because of its higher viscosity transformer oil must flow 1.75 times as fast as water to give the same Reynolds number. Determination of the heat transfer coefficient from transformer oil to the tube walls is then quite straightforward. To determine heat transfer from the finned tubes to the air, heat transfer coefficients are determined for various rates of water and air flow, the results of the calculations are given in Table 2 and Fig.1. Heat transfer coefficients from water to the tube wall are given in Table 3. Heat

Card 2/4

SOV/110-59-3-13/25

The Heat Transfer Coefficient of Radiators Cooled with Transformer Oil

transfer coefficients from the ribbed surface of the radiator to the air are given in Table 4 and from transformer oil to the tube wall at an oil temperature of 70°C in Table 5. Then heat transfer coefficients for radiators with various rates of air and oil flow are given in Table 6 and are also plotted in Fig.2 for various values of Reynolds number. From comparison of figures 1 and 2 it is concluded that for values of Reynolds number greater than 10^4 the curves are practically the same for water and transformer oil though, of course, it should be remembered that the oil must flow faster to give the same Reynolds number. The analysis shows that when the speed of the liquid in the radiator tubes is low artificial turbulence occurs which improves heat transfer

Card 3/4

SOV/110-59-3-13/25

The Heat Transfer Coefficient of Radiators Cooled with Transformer Oil

from the liquid to the walls. For the coolers to be efficient the oil speeds must be relatively high. There are 2 figures, 6 tables and 2 Soviet references.

SUBMITTED: 23rd December 1957

Card 4/4

VASIL'CHENKO, Yu.A., inzh.

Coordination conference on transformer cooling. Vest.elektroprom. 31 no.6:78 Je '60. (MIRA 13:7)
(Electric transformers--Cooling)

VASIL'CHIKOV, N.V., kand. tekhn. nauk

Study of the safety factor in using the radioactive method to classify the operation of breaking and drilling hammers. Nauch. soob. IGD 11:126-131 '61. (MIRA 16:4)

(Boring machinery)
(Radioisotopes—Safety measures)

SEMENOV, Leonid Alekseyevich, doktor tekhnicheskikh nauk; OSTROVSKIY, Aleksey Yemel'yanovich, kandidat fiziko-matematicheskikh nauk; SHTEYNBOK, G.Yu., inzhener, vedushchiy redaktor; [redacted] inzhener, vedushchiy redaktor; TOLCHINSKIY, Ye.M., inzhener, redaktor

[Device for determining specific heat and coefficient of heat conductivity of materials. Resistance thermograph for isothermic chambers] Stend dlia opredeleniia udel'noi teploemkosti i koeffitsienta teploprovodnosti materialov. Termograf sporotivleniia dlia izotermicheskikh kamer. Moskva, 1956. 12 p. (Pribory i stendy Tema 4, no. P-56-482) (MLRA 10:10)

1. Moscow. Institut tekhniko-ekonomicheskoy informatsii.
(Heat--Transmission)

VASIL'CHENKO, Z.N.

KHARIZOMENOV, Igor' Vladimirovich; OSTROVSKIY, Aleksey Yemel'ianovich; VASIL'CHENKO, Z.N., inzh., vedushchiy red.; TOLCHINSKOY, Ye.M., inzh., red.; POMOMAREV, V.A., tekhn.red.

[Electron-beam seconds counter. Photoelectric recording seismic inclinometer] Elektronno-luchevoi sekundomer. Seismonaklonomer s fotoelektricheskoi registratsiei. Moskva, 1956. 14 p. (Pribory i stendy. Tema 1, No.P-56-495) (MIRA 11:5)

1. Moscow. Vsesoyuznyy institut nauchnoy i tekhnicheskoy informatsii. (Electronic instruments)

BUDZINSKIY, Oleg Zdislavovich, kandidat tekhnicheskikh nauk; MORGUNOVA, Nina Nikolayevna, kandidat tekhnicheskikh nauk; SVEDE-SHVETS, Nikolay Ivanovich, kandidat tekhnicheskikh nauk; UDAL'TSOV, A.F., glavnyy redaktor; VASIL'CHENKO, Z.N., inzhener, redaktor; POMIRANCEV, V.A., tekhnicheskiy redaktor

[Ts NIIChM-1 (Central Scientific Research Iinstitute of Ferrous metallurgy) tungsten-molybdenum thermocouple] Vol'fram-molibdenovaia termopara TsNIIChM-1. Moskva, Akad. nauk SSSR, 1956. 16 p. (Pribory i stendy. Tema 4, no. P-56-524) (MLRA 10:10)
(Thermocouples)

LIBEROV, Boris Isaakovich, kand.tekhn.nauk; VASIL'CHENKO, Z.N., inzh., vedushchiy red.; SMIRNOV, P.V., inzh., red.; POMAMAREV, V.A., tekhn.red.

[Using high-viscosity cracking residue and cracking gas in furnaces of cracking instllations] Ispol'zovania vysokoviazkikh kreking-ostatkov i kreking-gaza v pechakh krekin-ustanovok. Moskva, Filial Vses. in-ta nauchnoi i tekhn.inform., 1956. 23 p. (Informatsiia o nauchno-issledovatel'skikh rabotakh. Tema 28, no.I-56-198) (MIRA 10:12)

(Cracking process--Waste products)

NEUSYTIN, A.M., inzh., ved. red.; SENKEVICH, I.V., inzh., ved. red.; MORDVINOVA, N.P., inzh., ved.red.; VASIL'CHENKO, Z.N., inzh., ved.red.; SOROKINA, T.M., tekhn.red.; SMIRNOV, B.M., tekhn.red.
[Automatic control, remote control, and electric protection systems] Sistemy avtomaticheskogo i telemekhanicheskogo upravleniia i zashchity. Moskva, Filial Vses. in-ta nauchn. i tekhn. informatsii. 1957. 3 v. (Peredovoi nauchno-tekhnicheskii i proizvodstvennyi opyt. Tema 42. Nos. P-57-1/1, P-57-12/4, P-57-59/11) (MIRA 16:3)
(Automatic control) (Remote control) (Electric protection)

VASICHEV, B.N.; IL'INA, V.A.; LATYSHEV, V.K.; PLISKIN, Yu.S.

Scintillation counter for recording X radiation. Prib.i tekh. eksp. no.2:51-56 Mr-Ap '60. (MIRA 13:7)

1. TSentral'nyy nauchno-issledovatel'skiy institut chernoy metallurgii.
(Scintillation counters)
(X rays)

S/137/61/000/012/082/149
A006/A101

AUTHORS: Vasichev, B. N., Latyshev, V. K., Pliskin, Yu. S., Felinger, A. K., Lyubchenko, A. A., Farfel', Yu. A., Lebedev, O. P., Ivanov, V. I.

TITLE: A device to measure the thickness of hot rolled metal

PERIODICAL: Referativnyy zhurnal, Metallurgiya, no. 12, 1961, 13-14, abstract 12D92 (V sb. "Radioakt. izotopy i yadern. izlucheniya v nar. kh-ve SSSR, vol. 3" Moscow, Gostoptekhizdat, 1961, 205, 206)

TEXT: An instrument for measuring the thickness developed at TsNIIChM, is based on the method of dynamic compensation. The device consists of a receiving unit, a container of the measuring source, an electric driven clamp, a feed unit, a recording and an indicating unit. To control the operation of the device a coarse-wedge sector is mounted. The device is employed in a thickness range from 14 to 44 mm; it can however be designed for any range within 5 to 50 mm. In the case of the given model the device is an indicating one. It is intended to be incorporated into the programming unit, controlling the clamping screws of the mill, as a correcting device on periodic-rolling mills, and as an indicator in an automated reduction control system on continuous mills. The accuracy

Card 1/2

S/137/61/000/012/082/149
A006/A101

A device to measure the thickness ...

of the device is ± 0.1 mm on the whole range; the operational speed is one measurement per second.

N. Yudina

[Abstracter's note: Complete translation]

Card 2/2

S/137/61/000/011/096/123
A060/A101

AUTHORS: Vasichev, B. N., Valov, A. N., Pliskin, Yu. S.

TITLE: Measurement of small radioactive metal samples

PERIODICAL: Referativnyy zhurnal, Metallurgiya, no. 11, 1961, 36, abstract 11I247 (V sb. "Radioakt. izotopy i yadern. izlucheniya v. nar. kh-ve SSSR V. 3", Gostoptekhizdat, Moscow, 1961, 210-213)

TEXT: The authors set forth the principles of construction of an apparatus for measuring small radioactive samples of metal. Gas ionization counters have a counting efficiency of $\sim 1\%$ at a γ-quantum energy level of 1 Mev. When the specimen is completely encompassed by the radiation detector ($\Omega = 4\pi$), an increase in the counting efficiency may be attained by raising the number of counters encompassing the specimen, but this leads to a reduction in the reliability of the apparatus and to an increase of background. Greater possibilities are provided by the use of scintillation counters possessing a high counting efficiency. One of the best scintillants is NaI, activated with Tl. In the apparatus worked out scintillation counters were used as the radiation detectors, utilizing large NaI(Tl) crystals (d = 90 mm, L = 85 mm) and ФЭУ-24 (FEU-24)

Card 1/2

S/137/61/000/011/096/123

Measurement of small radioactive metal samples A060/A101

photomultipliers. The scintillation counting efficiency of the NaI(Tl) crystal of indicated dimensions constitutes ~80% in registering the γ-radiation of Co^{60}. The apparatus uses a circuit with two 2π-counters with a disk-shaped specimen between them and a delay for the pulses of the second 2π-counter. The use of two 2π-counters makes it possible to increase the count from the specimen, and the use of the delay - to select the upper threshold of discrimination corresponding to an energy of 1.4 Mev. Sources of background in the scintillation counter may be dark noise of the photomultiplier, radioactive impurities, the natural radioactivity of the materials, and cosmic radiation. Various methods of background-suppression are described. It is pointed out that the apparatus may be used for determining the activity of samples of metals containing the isotopes Co^{60}, Ru^{103} and others. To check the stability of operation of the apparatus, the counting rates from a specimen containing the Co^{60} isotope were measured for 8 hours. The photomultiplier was fed from a high-voltage rectifier of the counting circuit "Floks". The counter and the electronic block of the apparatus were connected to the power grid through a ferroresonant voltage-stabilizer of the СЭИ-220-0.5 (SEI-220-0.5) type. The apparatus elaborated makes it possible to carry out the radiometry of metal specimens having a specific radioactivity 5 times lower than that admissible according to (USSR) sanitary norms.
[Abstracter's note: Complete translation] Z. Fridman

Card 2/2

SHUVAYEV, V.S.; VASIL'CHIKOV, F.Ya.

Using graphs to solve some transportation problems. Izv.vys.uch.-zav.; stroi. i arkhit. 5 no.4:109-116 '62. (MIRA 15:9)

1. Kuybyshevskiy inzhenerno-stroitel'nyy institut imeni Mikoyana.
(Transportation, Automotive)

FINKEL'SHTEYN, Sh.D.; VASIL'CHIKOV, M.V.

Density of the sedimentary rocks of the Surkhandarya depression. Neftegaz. geol. i geofiz. no.4:42-45 '64. (MIRA 17:6)

1. Srednearatskiy filial Vsesoyuznogo nauchno-issledovatel'skogo instituta prirodnogo gaza.

[redacted]

VASIL'CHIKOV, I. V.

GODNEV, I. N., SVERDLIN, A. S. and VASIL'CHIKOV, I. V. CA: 41-2243/1
J. Phys. Chem. (USSR) 20, 803-0 (1946)
Temperature dependence of the O index of powder gases.

[redacted]

VASILCHIKOV, I. V.
I. N. GODNEV, ZhFKh 20, 803-9, 1946

[redacted]

VASIL'CHIKOV, I. V.

GODNEV, I. N., SVERDLIN, A. S., and VASIL'CHIKOV, I. V. CA: 41-2244i
J. Phys. Chem. (USSR) 20, 803-9 (1946)
Temperature dependence of the O index of powder gases.

[redacted]

MOROZOV, V.I., VASIL'CHIKOV, I.V.,
SVERDLIN, A.S., GODNEV, I.N.

Molecules

Force constants and action coefficients of the formaldehyde molecule. Zhur.fiz.khim., 16, No. 6, 1952.

Monthly List of Russian Accessions, Library of Congress, November 1952. Unclassified.

MOROZOV, V. I., VASIL'CHIKOV, I. V.
SVERDLIN, A. S., GODNEV, I. N.

Formaldehyde

Force constants and action coefficients of the formaldehyde molecule. Zhur.fiz.khim,, 16, No. 6, 1952.

Monthly List of Russian Accessions, Library of Congress, November 1952. Unclassified.

CA

Chemistry D2

Force constants and coefficients of interaction of the formaldehyde molecule. V. P. Morozov, I. V. Vasil'chikov, A. S. Sverdlin, and I. N. Godnev (Chem.-Technol. Inst., Ivanovo). *Zhur. Fiz. Khim.* 26, 792-5(1952).—Force consts. and coeffs. of interaction are calcd. from the vibrational spectra of HCOH and DCOD. J. J. Bikerman

SOV/137-57-10-19033

Translation from: Referativnyy zhurnal, Metallurgiya, 1957, Nr 10, p 86 (USSR)

AUTHORS: Anisiforov, V.P., Granovskiy, S.P., Vasil'chikov, M.V.

TITLE: Helical Rolling of Round Periodically Recurrent Profiles, Balls, and Gears (Poperechno-vintovaya prokatka kruglykh periodicheskikh profiley, sharov i shesteren)

PERIODICAL: V sb.: Ratsionalizatsiya profiley prokata, Moscow, Profizdat, 1956, pp 296-318

ABSTRACT: The TsNIITMash has developed a production process for the rolling (R) of round periodically recurrent shapes. Appx. 10-30% saving of metal has been attained in this way. The R is performed by three rolls, tapered or disc-type, at an angle of 120° to each other in the working stand of the mill. As the billet advances, the rolls converge and separate in accordance with the shape of a repeater guide, and the helical rolling process is performed. The use of longitudinal tension on the billet makes it impossible for porousness to develop in the axial zone, and this is confirmed by appropriate tests of the mechanical properties and structure. In addition, the fiber structure follows the external shape of the product. The R results in a rise in the

Card 1/2

SOV/137-57-10-19033

Helical Rolling of Round Periodically Recurrent Profiles, Balls and Gears

mechanical properties and this makes it possible to increase the load on the product. A 2-roll helical rolling mill with helical pass grooves is used to produce balls 1-2" in diam for roller bearings, as well as the production of 40-80 mm milling balls. These mills are analogous to piercing mills for tubing. When used to manufacture ball-bearing balls, the output capacity of such a mill is 3 times as great as that of a horizontal upsetter and affords metal savings of 15-20%. In manufacturing milling balls, the labor involved is cut to a fifth or a sixth. In addition, a description of 2 industrial gear-R mills is presented. Gear manufacture by R makes for better metal in the gear crown, as the fibers of metal in the tooth are not cut but bent to comply with the tooth profile. The strength of the teeth is 50% higher than in milled gears.

S.G.

Card 2/2

VASIL'CHIKOV, L. V.

"Investigation of the Method of Rod Rolling of the Teeth of Gears and Utilization of an Industrial Mill." Min Transport and Heavy Machine Building, Central Sci Res Inst of Technology and Machine Building (TSNIITMash), Moscow, 1953
(Dissertation for the Degree of Candidate of Technical Sciences)

SO: Knizhnaya Letopis', No. 32, 6 Aug 55

VASILCHIKOV, M.V.

2501 Hot-Rolled Gear Wheels. A. D. Kuzmin, M. V. Vasilchikov, and M. V. Barbarich. Engineers' Digest, v. 16, Dec. 1955, p. 575-577. (Translated from Vestnik Mashinostroyenya, v. 35, no. 3, Mar. 1955, p. 53-56; no. 9, Sept. 1955, p. 41-44.) Production process for the hot-rolling of gears with a quality entirely satisfactory for engineering purposes. Diagrams, graph.

MC MG

2

USSR/ Engineering - Metal working

Card 1/1 Pub. 128 - 17/35

Authors : Kuz'min, A. D., Cand. Tech. Sc.; Vasil'chikov, M. V., Cand. Tech. Sc.; and Barbarich, M. V., Engineer

Title : Contact fatigue of the teeth of gears made by hot rolling

Periodical : Vest. mash. 35/3, 53 - 56, Mar 1955

Abstract : An account is given of studies made of the microstructure of gear wheels made by the process of hot rolling, a process which has enormously speeded up the production of these wheels. Tests were made by which it was shown that the surface toughening of the teeth of the wheels, resulting from the plastic deformation of the metal during the rolling, considerably increases the resistance of the teeth to fatigue, making them superior to teeth cut on the milling machine. Illustrations; graphs.

Institution : .....

Submitted : .....

V 15301* Industrial Production of Cylindrical Gears by Hot Rolling. Iz opyta promyshlennogo proizvodstva tsilindricheskikh zubchatykh kolos metodom goriachei prokatki. (Russian.) A. D. Kuz'min and M. V. Vasil'chikov. *Vestnik mashinostroenia*, v. 35, no. 9, Sept. 1955, p. 41-44.

62

Wear and strength tests show that the gear teeth of gears thus produced are superior to milled ones. Diagrams, photographs, table, graph.

(1)

VASIL'CHIKOV, M.V., kandidat tekhnicheskikh nauk; BARBARICH, M.V.; KIRPICHNIKOV, F.P.

Thread-rolling jack screws. Avt. i trakt.prom. no.11:27-30 N '56. (MLRA 10:1)

1. TSentral'nyy nauchno-issledovatel'skiy institut tekhnologii i machinostroyeniya.

(Lifting jacks) (Machine-shop practice)

VASIL'CHIKOV, M.V.

PHASE II BOOK EXPLOITATION 494-II

Smirnov, V. S.; Anisiforov, V. P.; Vasil'chikov, M. V.; Granovskiy, S. P.; Kazanskaya, I. I.; Kuz'min, A. D.; Mekhov, N. V.; Pobedin, I. S.

Poperechnaya prokatka v mashinostroyenii (Cross Rolling in the Machine-building Industry) Moscow, Mashgiz, 1957. 375 p. 4,500 copies printed.

Ed. (title page): Tselikov, A. I., Corresponding Member, USSR Academy of Sciences, and Smirnov, V. S., Doctor of Technical Sciences, Professor; Ed. (inside book): Kamnev, P. V.; Ed. of Publishing House: Leykina, T. L.; Tech. Ed.: Sokolova, L. V.; Managing Ed. of the Leningrad Branch of Mashgiz: Bol'shakov, S. A., Engineer.

INTRODUCTION

In this book, which is devoted to the study of cross rolling and helical cross-rolling processes in the Soviet machine-building industry, the authors discuss very systematically and in detail the principles, theory, and technological aspects of roll forming of balls and gears as well as die rolling of periodic shaped stock.

~~Card 1/30~~

1/3

Cross Rolling in the Machine-building Industry 494-II

The terms cross rolling (poperechnaya prokatka) and helical cross rolling (poperechno-vintovaya prokatka) require a brief explanation here. By cross rolling, the Russians understand a rolling process in which two parallel rolls revolve in the same direction, their longitudinal axes being parallel to the axis of the work. The term helical cross rolling denotes a rolling operation between cone rolls, the axes of which are slightly inclined to opposite angles, thus producing a helical advance of the work. Die rolling in this case is a special type of helical cross rolling in which helically grooved rolls are used, instead of plain tapered ones, to produce shapes such as balls, rollers, annular shapes, periodic profiles, etc. The rolling of bearing balls is said to have already replaced the ball-pressing method in the USSR, increasing productivity 2 to 7 times, and saving 10 to 25 percent in expensive alloy steels. Gear rolling is reported to be a current development project in the USSR. Rolled gears are said to have been successfully produced to grade 3 accuracy with a grade 7 to 10 surface roughness. Methods for determining rolling forces, stresses, torque, and power, based on modern concepts of the theory of plasticity and strength of materials, are discussed, and formulas derived. All the methods involved in these rolling processes are discussed with great clarity, and case histories and specific examples are included. According to the authors, the mechanical

~~Card 2/30~~
2/3

properties of press-formed parts or of parts machined from periodic rolled stock are considerably higher than those made from conventional plain rolled stock, not to mention a 20 to 30 percent saving in material.

The development of the theoretical principles and the technological processes of cross rolling and helical cross rolling in the USSR is said to have been carried on intensively since 1942. The theory was developed by V. S. Smirnov on the basis of experiments conducted at the Ural'skiy politekhnicheskiy institut (Ural Polytechnic Institute) and later at the Leningradskiy politekhnicheskiy institut (Leningrad Polytechnic Institute). The development of machinery and equipment for cross rolling and helical cross rolling was supervised by A. I. Tselikov at the TsNIITMASh (Tsentral'nyy nauchno-issledovatel'skiy institut tekhnologii i mashinostroyeniya — Central Scientific Research Institute of Technology and Machinery). Some machine-building plants, e.g., the Gor'kovskiy avtomobil'nyy zavod (Gor'kiy Automobile Plant), have developed cross-rolling mills of their own design. The contents of this book are reviewed below, chapter by chapter.

SOV/122-58-6-16/37

AUTHOR: Vasil'chikov, M.V., Candidate of Technical Sciences, Volkov, M.M. and Barbarich, M.V., Engineers

TITLE: The Rolling-on of Teeth in the Fluted Pins of Cotton -spinning Machines (Nakatka zub'yev riflenykh tsilindrov khlopkopryadil'nykh mashin)

PERIODICAL: Vestnik Mashinostroyeniya, 1958, Nr 6, pp 45-46 (USSR)

ABSTRACT: A process for cold-rolling the teeth in fluted pins for cotton-spinning machines developed by the TsNIITMASh Institute is described. In these components, the flutes have a varying pitch. The rolling roller, of a diameter which is a multiple of the component diameter, must have teeth repeating several times the cycle of pitch variation in the component. To avoid the need for a precise relation between several rollers, only one roller rolls the teeth. The other two in a three-roller unit clear the teeth and simultaneously surface-roll the neck sections between the fluted lengths of the pin. The correct choice of the diameter of the fluted sections before rolling proved to be the main factor in achieving good accuracy. Tests carried out at different surface speeds have shown the best speed to be about 9 m/min. The flute rolling roller was itself produced by a rolling

Card1/2

SOV/122-58-6-16/37

The Rolling-on of Teeth in the Fluted Pins of Cotton-spinning Machines

process from a master component. The latter was made of ShKh15 steel, hardened to 50-55 Rockwell C. The master was compressed between 3 blanks of rolling rollers. The master has a tapered entry section and is drawn through between the roller blanks. These blanks were made of 0.45% carbon steel or of low-alloy medium carbon steel. After the rolling operation, they were heat-treated and polished. The height of the teeth in the master and the rolling roller exceeded that of the component by 0.2 mm. The resultant pressure during the component rolling operation was measured. When rolling flutes of 35 mm length together with 2 plain neck sections of 35 mm lengths each, the total pressure amounted to 6 tons. Without the surface rolling of the necks the pressure amounted to 4.8 tons. There are 3 figures.

Card 2/2 1. Rolling mills--Applications

VASIL'CHIKOV, M.V.; VOLKOV, M.M.; MEYLER, B.A.

New techniques for making billets for worm-gear cutters. Stan.i instr. 30 no.4:7-9 Ap '59. (MIRA 12:6)
(Gear-cutting machines)

VASILICHIKOV, M.V.; VOLKOV, M.M.

Hot rolling of long threads with a coarse pitch on hollow shapes. Kuz.-shtam. proizv. 2 no.11:7-10 N '60. (MIRA 13:10)
(Rolling (Metalwork)) (Screw threads)

S/122/60/000/007/007/011
A161/A029

AUTHORS: Vasil'chikov, M.V., Candidate of Technical Sciences; Barbarich, M. V., Candidate of Technical Sciences; Kapitonov, I.M., Engineer

TITLE: Producing the Novikov Gears by Hot Rolling

PERIODICAL: Vestnik mashinostroyeniya, 1960, No. 7, pp. 46 - 49

TEXT: The described experiments were undertaken to find out if the point-contact Novikov gears could be generated by hot rolling process used already in the industry for conventional involute profile gears. The load capacity of Novikov gears produced by cutting has been studied at the Gear Department of TsNIITMASh, and therefore same gear dimensions were used in the experiments with hot rolling to compare mechanical properties. TsNIITMASh used special milling cutters for Novikov pinion and gear wheel (Figs. 1 and 2, respectively), with different tooth contour arc radii. The hot rolling ЦКБММ-58 (TsKBMM-58) machine is shown in a photo (Fig. 4) with a gear blank installed between the bottom (indexing) rollers. Rolling on long blanks with subsequent cutting into single gears (as is practiced in rolling involute gears) was not possible because of slipping of the blank on the standard indexing pinion. Slipping caused either a wrong

Card 1/2

tooth number, or distorted teeth (photo, Fig. 3). Success was achieved with single gear blanks in the mentioned TsKBMM-58 machine with a pair of indexing and roughing rollers and a pair of sizing finishing rollers above the indexing. Blanks were heated in an annular induction heater (marked "2" in Fig. 4) to 1,100 - 1,150°C and moved into the bottom indexing rollers ("3") mounted on mobile carriages. Then blanks with roughly rolled teeth were passed into the sizing rollers ("4"). The outline of rolled Novikov gear teeth is shown in a diagram (Fig. 5), where line "1" is the outline after roughing and line "2" after sizing, and a photo (Fig. 6). With gears with 6.5 mm high teeth the total rolling time in both roller pairs was 20 sec; the heating took 40 sec, the passing from the roughing into the finishing rollers 10 sec, i.e., the total production time of one gear was 70 sec. The initial blank diameter has to be smaller than the finished gear diameter, for no metal is removed and the tooth addendums are formed from metal squeezed out of the grooves. The article includes details of hot rolling process and calculation formulas for dimensions of gears with convex and concave tooth outline. Rolled gear teeth had smooth and sound surface (finish "6"); the tooth metal structure was finely grained and dense; the outer gear and pinion diameters error was between -0.10 and +0.15. There are 6 figures.

S/182/60/000/011/002/016
A161/A029

AUTHORS: Vasil'chikov, M.V., Volkov, M.M.

TITLE: Hot Rolling of Long Large-Lead Thread on Hollow Work

PERIODICAL: Kuznechno-shtampovochnoye proizvodstvo, 1960, No. 11, pp.7-10

TEXT: The VNIIMETMASh Institute has developed a new method and a mill for hot rolling of mine propping bolts with round thread. The rolling process is called "poperechno-vintovaya prokatka" (helical cross rolling), its essence is illustrated (Fig. 3). Up to now these bolts were cut. The new method raises the productivity by 25-30 times, eliminates metal waste into chip, and cuts the cost of a bolt from 6-7 rubles to 4-5. The first mill is working at the Toretskiy mashinostroitel'nyy zavod ugol'nogo mashinostroyeniya (Toretsk Plant of Coal Mining Machinery). The article includes the drawing of a roll (Fig. 4) and a calculation formula for the roll width. Experiments were carried out with rolling on a mandrel and without mandrel and it was stated that the mandrel had practically no effect on the deformation process in thick-wall screws due to the increas-

Card 1/4

S/182/60/000/011/002/016
A161/A029

Hot Rolling of Long Large-Lead Thread on Hollow Work

ing inner diameter of the blank, but when the blank wall was not thick, the mandrel was necessary. The rolling process parameters for the round thread "136 x 32" and "130 x 32" on blanks of 30ГЭЛ (30G9L) steel are given. The experimentally established dimensions for cast hollow blanks are: a) for "136 x 32" thread - outer diameter (D) 123 mm and inner diameter (d) 45 mm; b) for "130 x 32" thread - D = 117 mm, d= 42 mm. Blanks are heated at the Tortsy plant in a fuel oil firing furnace, the thread rolling temperature is 950 - 1,050°C. In order to facilitate the feed of the blanks into the mill the blanks are bevelled on 30 mm length with a 20° taper angle (see Fig. 4 "i_K"). Hot-rolled steel blanks are used as well. In this case they are of 40Х (40Kh) alloy steel with D = 90 mm and 25 mm taper ("i_K") with 15°. Axial elongation of the blanks after rolling is 8-10%. The metal in the rolled thread is improved comparing to a cast structure; it becomes fibrous on the outside (Fig. 8). The rolled thread surface is smoother than a cut surface and rolled bolts are easier to retract in the mine. The rolling mill is not described. The dimensions

Card 2/4

S/182/60/000/011/002/016
A161/A029

Hot Rolling of Long Large-Lead Thread on Hollow Work

and elements of the profile of the rolls are given. There are 8 figures and 3 tables.

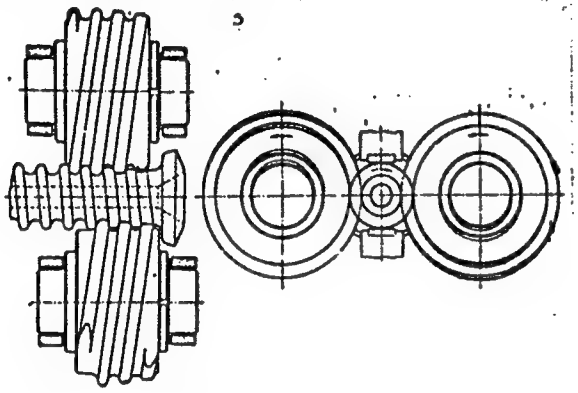

Figure 3:

Card 3/4

S/182/60/000/011/002/016
A161/A029

Hot Rolling of Long Large-Lead Thread on Hollow Work

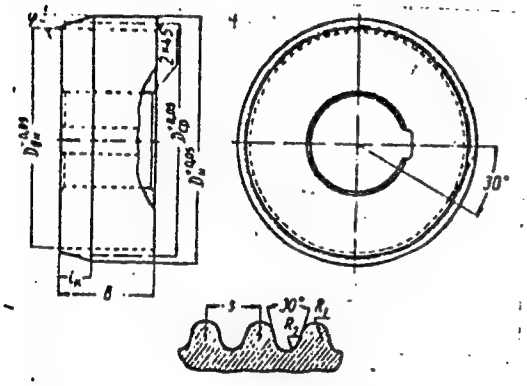

Figure 4:

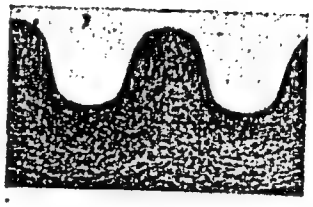

Figure 8:

Card 4/4

VASIL'CHIKOV, M.V.

(40)

PHASE I BOOK EXPLOITATION SOV/6044

Rokotyan, Ye. S., Doctor of Technical Sciences, Ed.

Prokatnoye proizvodstvo; spravochnik (Rolling Industry; Handbook) v. 2. Moscow, Metallurgizdat, 1962. 685 p. 8500 copies printed.

Authors: P. A. Aleksandrov, Doctor of Technical Sciences; V. P. Anisiforov, Candidate of Technical Sciences; V. I. Bayrakov, Candidate of Technical Sciences; N. V. Barbarich, Candidate of Technical Sciences; B. P. Bakhtinov, Candidate of Technical Sciences [deceased]; B. A. Bryukhanenko, Candidate of Economic Sciences; M. V. Vasil'chikov, Candidate of Technical Sciences; A. I. Vitkin, Doctor of Technical Sciences; S. P. Granovskiy, Candidate of Technical Sciences; P. I. Grudev, Candidate of Technical Sciences; I. V. Gunin, Engineer; M. Ya. Dzugutov, Candidate of Technical Sciences; V. G. Drozd, Candidate of Technical Sciences; N. P. Yermolayev, Engineer; G. M. Katsnel'son, Candidate of Technical Sciences; M. V. Kovynev, Engineer; M. Ye. Kugayenko, Engineer; N. V. Litovchenko, Candidate of Technical Sciences; Yu. M. Matveyev, Candidate of Technical

Card 1/14

(40)

SOV/6044

Rolling Industry; Handbook

Sciences; V. I. Heleshko, Candidate of Technical Sciences; N. V. Melkhov, Engineer; A. K. Hinburg, Candidate of Technical Sciences; V. D. Nosov, Engineer; B. I. Panchenko, Engineer; O. A. Plyatskovskiy, Candidate of Technical Sciences; I. S. Pobedin, Candidate of Technical Sciences; I. A. Priymak, Professor, Doctor of Technical Sciences [deceased]; A. A. Protasov, Engineer; M. M. Saf'yan, Candidate of Technical Sciences; N. M. Fedosov, Professor; S. N. Filipov, Engineer [deceased]; I. N. Filippov, Candidate of Technical Sciences; I. A. Fomichev, Doctor of Technical Sciences; M. Yu. Shifrin, Candidate of Technical Sciences; E. R. Shor, Candidate of Technical Sciences; M. M. Shternov, Candidate of Technical Sciences; M. V. Shuralev, Engineer; I. A. Yukhvets, Candidate of Technical Sciences; Eds. of Publishing House: V. M. Gorobinchenko, R. M. Golubchik, and V. A. Rymov; Tech. Ed.: L. V. Dobuzhinskaya.

PURPOSE: This handbook is intended for engineering personnel of metallurgical and machine-building plants, scientific research

Card 2/14

(43)

SOV/6044

Rolling Industry; Handbook

institutes, and planning and design organizations. It may also be used by students at schools of higher education.

COVERAGE: Volume 2 of the handbook reviews problems connected with the preparation of metal for rolling, the quality and quality control of rolled products, and designs of roll passes in merchant mills. The following topics are discussed: processes of manufacturing semifinished and finished rolled products (the rolling of blooms, billets, shapes, beams, rails, strips, wire, plates, sheets, and the drawing of steel wire), hot-dipped tin plates, lacquered plates, floor plates, tubes made by different methods, and special types of rolled products. Problems of the organization of rolling operations are reviewed, and types of rolled products manufactured in the USSR are shown. No personalities are mentioned. There are no references.

TABLE OF CONTENTS: [Abridged]:

Card 3/14

Rolling Industry; Handbook SOV/6044

Card 1D/14

VASIL'CHIKOV, M.V.; VOLKOV, M.M.; MEYLER, B.A.

Lateral-helical rolling of hobbing-cutter billets. Stan. i instr. 34 no.11:12-14 N '63. (MIRA 16:12)

TSELIKOV, A.I., akademik; VASIL'CHIKOV, M.V., kand. tekhn. nauk

New advanced technology is the basis for the automation of production processes. Mekh. i avtom. proizv. 18 no.10: 1-4 O '64. (MIRA 17:12)

VASILCHIKOVA, K.V.

Suiting fabrics made from viscose staple fibers and blended yarns. Izv. vys. uchob. zav.; tekh. tekst. prom. no.4:164-166 '65. (MIRA 18:9)

1. Ivanovskiy tekstil'nyy institut imeni Frunze.

VASIL'CHIKOV, N. V.: Master Tech Sci (diss) -- "A new method of investigating mining machinery operating by blows". Moscow, 1958. 12 pp (Main Admin of Sci Res and Design Organizations of the Gosplan USSR, All-Union Sci Res Coal Inst VUGI), 150 copies (KL, No 2, 1959, 120)

SOV/122-59-4-11/28

AUTHOR: Vasil'chikov, N.V., Engineer

TITLE: ~~The Measurement of~~ Displacement by the Method of Radioactive Radiation (Izmereniye peremeshcheniy metodom radioaktivnogo izlucheniya)

PERIODICAL: Vestnik Mashinostroyeniya, 1959, Nr 4, pp 46-47 (USSR)

ABSTRACT: An installation is illustrated (Fig 1) and described in which an air/vacuum hammer ram piston was covered with a source of gamma radiation containing cobalt 60. A scintillation counter consisting of a single crystal of NaJTI and a photomultiplier (FEU-19m) were placed outside the hammer in order to detect the ram displacement inside the hammer so as to produce an indicator diagram on the screen of a cathode ray oscilloscope. As the ram is displaced, the intensity of irradiation of the scintillation counter crystal changes, which causes a change of voltage across a load resistance. The voltage is transmitted through a system of RC filters to the amplifier of the vertical set of deflecting cathode ray tube plates. The other set of plates receives its signal from a strain gauge carrying membrane transmitter designed by the Institut Mashinovedeniya (Mechanical

Card 1/2

SOV/122-59-4-11/28

The Measurement of Displacement by the Method of Radioactive Radiation

Engineering Institute) AN SSSR. Although the curve of the displacement detector is non-linear, it has a linear working section. The time constant permits the recording of events down to 0.1 millisecond duration. For short stroke applications an external radiation source located along the stroke may be preferable. There are 2 figures.

Card 2/2

PHASE I BOOK EXPLOITATION SOV/4487

Akademiya nauk SSSR. Institut mashinovedeniya. Seminar po teorii mashin i mekhanizmov

Trudy, t. 20, vyp. 80 (Transactions of the Institute of the Science of Machines, Seminar on the Theory of Machines and Mechanisms, Vol. 20, No. 80). Moscow, 1960. 80 p. Errata slip inserted. 3,500 copies printed.

Editorial Board: I.I. Artobolevskiy (Resp. Ed.) Academician, G.G. Baranov, Professor, Doctor of Technical Sciences, M.L. Bykhovskiy, Doctor of Technical Sciences, V.A. Gavrilenko, Professor, Doctor of Technical Sciences, V.A. Zinov'yev, Professor, Doctor of Technical Sciences, A.Ye. Kobrinskiy, Doctor of Technical Sciences, N.I. Levitskiy, Professor, Doctor of Technical Sciences, N.P. Rayevskiy, Candidate of Technical Sciences, L.N. Reshetov, Professor, Doctor of Technical Sciences, and M.A. Skuridin, Professor, Doctor of Technical Sciences; Ed. of Publishing House: V.A. Sokolova-Chestnova; Tech. Ed.: S.G. Tikhomirova.

PURPOSE: This collection of articles is intended for technical personnel interested in the theory of machines and mechanisms.

Card 1/4

COVERAGE: The collection contains four articles submitted to the Seminar on the Theory of Machines and Mechanisms. The foreword to the collection was written by I.I. Artobolevskiy, Academician, Scientific Director of the Seminar. Included in the foreword are summaries of the four articles. References accompany three of the articles. All references are Soviet, with the exception of one translation from English.

TABLE OF CONTENTS:

Transactions of the Institute (Cont.) SOV/4487

Vasil'chikov, N.V. Measurement of Displacements by Means of Radioactive Isotopes in Closed Containers Under Pressure 23

The author discusses the problem of recording linear displacements of machine parts not connected with others (e.g., piston of an electro-pneumatic hammer).

Gerts, Ye. V., and G.V. Kreynin. Design of the Double-Acting Pneumatic Piston-Type Actuator 36

The authors describe the method of designing (using dimensionless parameters) a double-acting pneumatic piston-type actuator working with pressures of 5 -6 absolute atmospheres. The methods used in experimental investigation are examined and a comparative analysis of design and experimental data is given.

Lyudmirskaya, I.B. Application of Digital Computers for the Synthesis of Four-Bar Linkage-Type Computing Mechanisms 64

The author emphasizes the importance of digital computers in making it possible to develop new methods for finding the acceptable variant of

Card 3/4

Transactions of the Institute (Cont.) SOV/4487

a mechanism. Two methods of the synthesis of four-bar linkages are discussed and preparatory work for their solution by computers is described. The author concludes that the method of the quickest triggering action may be used to determine a kinematically sound mechanism.

AVAILABLE: Library of Congress

VK/wrc/gmp
11-18-60

Card 4/4

IVANOV, Konstantin Ivanovich; GLAZUNOV, Vsevolod Nikolayevich; NADION, Mikhail Fedotovich [deceased]; BRONNIKOV, D.M., doktor tekhn. nauk, retsenzent; VASIL'CHIKOV, N.V., kand. tekhn. nauk, otv. red.; KOSTON'YAN, A.Ya., red.izd-va; LOMILINA, L.N., tekhn. red.

[Modern methods of hard rock drilling] Sovremennye metody bureniia krepkikh porod. Moskva, Gosgortekhizdat, 1963. 191 p. (MIRA 16:12)

(Rock drills)

VASIL'CHIKOV, N.V., referent

Prospects of mining diamods from the bottom of the sea off the coast of South-West Africa (from "Diamond News and South African Jeweler," no.5, 1962; "The Mining World and Engineering Record," no. 4560, 1962). Gor. zhur. no.3:68-69 Mr '63. (MIRA 16:4)

Card 1/4

L 16654-65
ACCESSION NR: AP4048460

chemical properties are studied for the first time. These studies showed that some of these esters have good properties as plasticizers and can be used with polyvinyl chloride, polyamide and nitrocellulose resins. [illegible] continued with reference to im- [illegible]

ASSOCIATION: Institut neftekhimicheskikh protsessov (Institute of Petrochemical Processes)

SUBMITTED: 19Feb.64 ENCL: 00 SUB CODE: OC

NO REF SOV: 009 OTHER: 000

Card 2/2

VASIL'CHIKOV, N.V.

Treasures of underwater storerooms. Priroda 53 no.2:26-31 '64. (MIRA 17:2)

1. Moskovskiy gosudarstvennyy universitet im. Lomonosova.

BUCHNEV, Valer'yan Konstantinovich, prof., doktor tekhn. nauk, [deceased]; BRONNIKOV, Dmitriy Mikhaylovich, doktor tekhn. nauk; VASIL'CHIKOV, Nikolay Vasil'yevich, kand. tekhn. nauk; GANZEN, Georgiy Aleksandrovich; SHUSTOV, Nikolay Vasil'yevich; FETEROVICH, Izrail' Izraylevich, inzh.; DEMIDYUK, G.P., otv. red.; BURTSEV, L.I., otv. red.; KOROLEVA, T.I., red. izd-va; OSVEYENKO, V.G., tekhn. red.; PROZOROVSKAYA, V.L., tekhn. red.

[Handbook on drilling boreholes in underground workings] Spravochnik po bureniiu shpurov i skvazhin na podzemnykh rabotakh. [By] V.K.Buchnev, i dr. Moskva, Gosgortekhizdat, 1962. 271 p. (Boring) (MIRA 15:12)

ACC NR: AP6034007 SOURCE CODE: UR/0213/66/006/005/0823/0829

AUTHOR: Vasil'chikov, N. V.; Pavlidis, Yu. A.; Slovinskiy-Sidak, N. P.;

ORG: Institute of Oceanology, AN SSSR (Institut okeanologii AN SSSR); Moscow State University im. M. V. Lomonosova (Moskovskiy gosudarstvennyy universitet); Central Scientific Research Institute of Ferrous Metallurgy im. I. P. Bardin (Tsentral'nyy nauchno-issledovatel'skiy institut chernoy metallurgii)

TITLE: Vanadium titanomagnetite placers on coastal beaches in the Far East

SOURCE: Okeanologiya, v. 6, no. 5, 1966, 823-829

TOPIC TAGS: geologic surveying, geomorphology, ocean floor topography, vanadium, placer, beach, MINERALOGY

ABSTRACT: The existing titanomagnetite placers of coastal beach moraine genesis found in the Far Eastern USSR from large deposits of vanadium ore. Placers of this type have a number of accumulative formations (with different titanomagnetite contents) stretching in bands approximately parallel to the shoreline. Reserves of this useful mineral in some of the placers have been tentatively estimated at millions of tons. However, the regenerative ability of modern placers should be taken into consideration. Owing to the looseness of the ore body and the surface bedding of the deposits mining from such placers is comparatively cheap and simple. Orig. art. has: 3 figures and 2 tables.

SUB CODE: 08/ SUBM DATE: 02Mar66/ ORIG REF: 007/ OTH REF: 003/
UDC: 551.351(571.6)

Card 1/1

VASIL'CHIKOV, S.A., inzh.; KROSHKIN, M.T., inzh.

Investigating the packing capacity of light packing in a flange joint. Khim. i neft. mashinostr. no.5:17-18 N '64 (MIRA 18:2)

L 04844-67 EWT(1) GW

ACC NR: AP7000249 SOURCE CODE: UR/0213/66/006/003/0519/0528

AUTHOR: Vasil'chikov, N. V.; Ignatov, Ye. I.; Shumilov, A. V.

ORG: Department of Oceanology, Moscow State University im. M. V. Lomonosov (Moskovskiy gosudarstvenyy universitet, Kafedra okeanologii)

TITLE: Redesign of the 'Okean' hawser winch into a cable winch

SOURCE: Okeanologiya, v. 6, no. 3, 1966, 519-528

TOPIC TAGS: winch, connecting cable

ABSTRACT: The redesign of the "Okean" hawser winch into a cable winch has been described in detail, accompanied by seven detailed diagrams and photographs. Detailed directions are given for splicing the cable (a method developed by the All-Union Scientific Research Institute of Geophysics); the diameter of the cable to all intents and purposes is not enlarged at the splicing point and there is no change of the mechanical and electrical characteristics of the cable. The redesigned winch and the mentioned splicing method have successfully withstood all tests. Orig. art. has: 7 figures. [JPRS: 37,058]

SUB CODE: 13 / SUBM DATE: 08 Apr 65

Card 1/1 UDC: 551.46.073: 621.866

0923 0723

VASIL'CHIKOV, Vasiliy Semenovich

VASIL'CHIKOV, Vasiliy Semenovich; SOLOV'YEV, N.I., red.; MEDNIKOVA, A.N., tekhn. red.

[Division commander Shchors] Nachdiv Shchors; boevoi put'. Moskva, Voen.izd-vo M-va obor. SSSR, 1957. 115 p. (MIRA 11:2)
(Shchors, Nikolai Aleksandrovich, 1885-1919)

IKORNIKOVA, N.Yu.; SHORYGIN, V.A.; VASIL'CHIKOVA, I.A.

Growing calcite single crystals under hydrothermal conditions. Rost krist. 4:92-94 '64. (MIRA 17:8)

VASIL'CHIKOVA, S.I.

Comparative study on the improving action of chemicals on soda Solonetz soils. Pochvovedenie no.6:49-53 Je '65. (MIRA 18:11)

1. Tadzhikskiy nauchno-issledovatel'skiy institut pochvovedeniya. Submitted Jan. 2, 1964.

VASILCHIKOVA, V. F. KHISIN, YA I

Azot V Zhidkikh Produktakh Polukonsovaniya Kashpirskikh Slantsev, Goryuchiye Slantsy, 1934, No 2,52 No 3,23

SO:

Goryuchiye Slantsy / 1934-35, TN .871
G .74

VASIL'CHENKOVA, V. E. KHISIN, YA. I.

Gazy Polukoksovaniya Slantsev, Goryuchiye Slantsy, 1935, No 5, 49

SO: Goryuchiye Slantsy # 1934-35, TN .871
G .74

Vasil'chikova, V. F.; Khisin, Ya. I.

Fiziko-Khimicheskaya Kharakteristika Kashpirskoy Slantsevoy Smoly
Goryuchiye Slantsy, 1934, No. 1, 50

SO: Goryuchiye Slantsy No. 1934-35 TN .871
.G74